DERAAH VILLAGE GATE LIGHTING DESIGN

Welcome

The lighting design aims to highlight the architectural elegance and symmetry of the main gate, creating a strong and timeless visual identity. Our goal was to ensure that the gate maintains its character and presence throughout the day and into the night, with a lighting approach that complements its classical features.

Lighting layering

We applied a layered lighting strategy to emphasize the architectural depth and hierarchy of the façade.

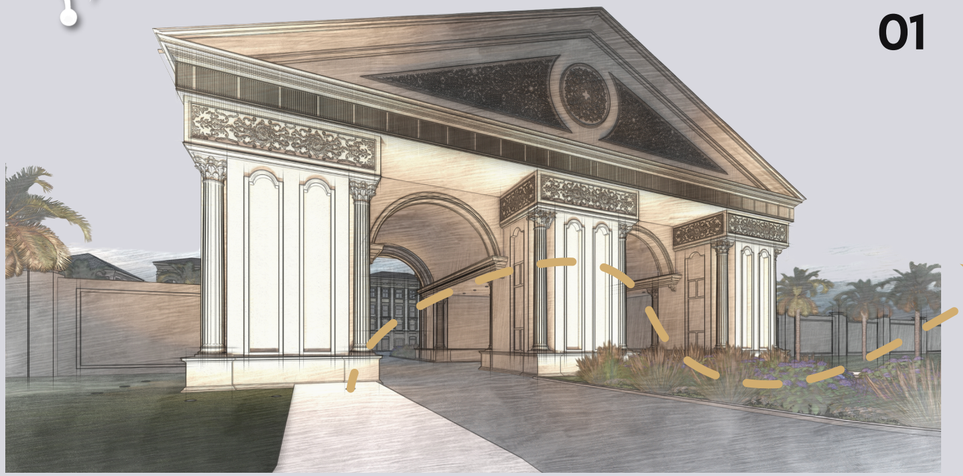

01

Wall washers on the main elevation columns to enhance their verticality and classical form.

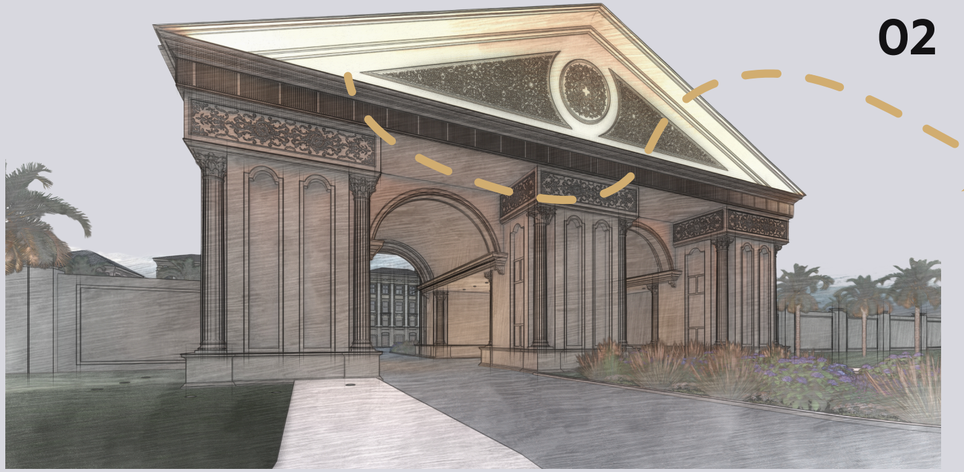

02

Grazers on the upper edge to softly define the triangular pediment and emphasize its geometry.

03

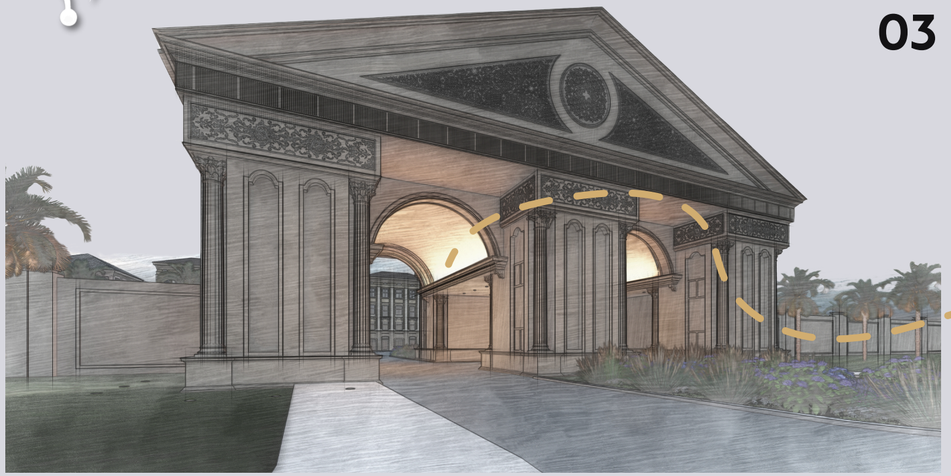

Linear fixtures inside the inner arches, creating a warm and inviting glow that enhances the curvature.

04

Recessed downlights along the vehicle path for general illumination and safety, subtly integrated into the structure.

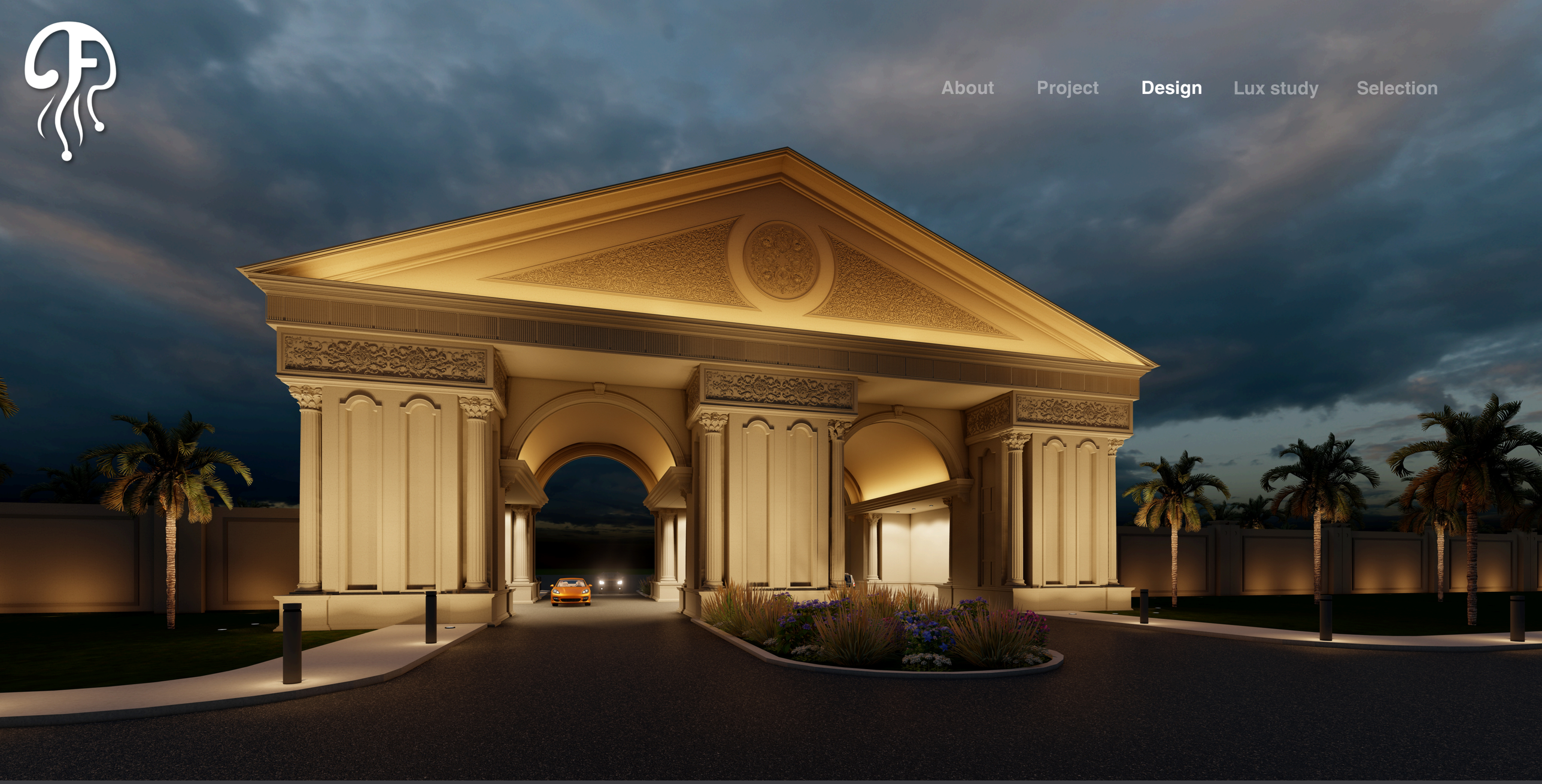

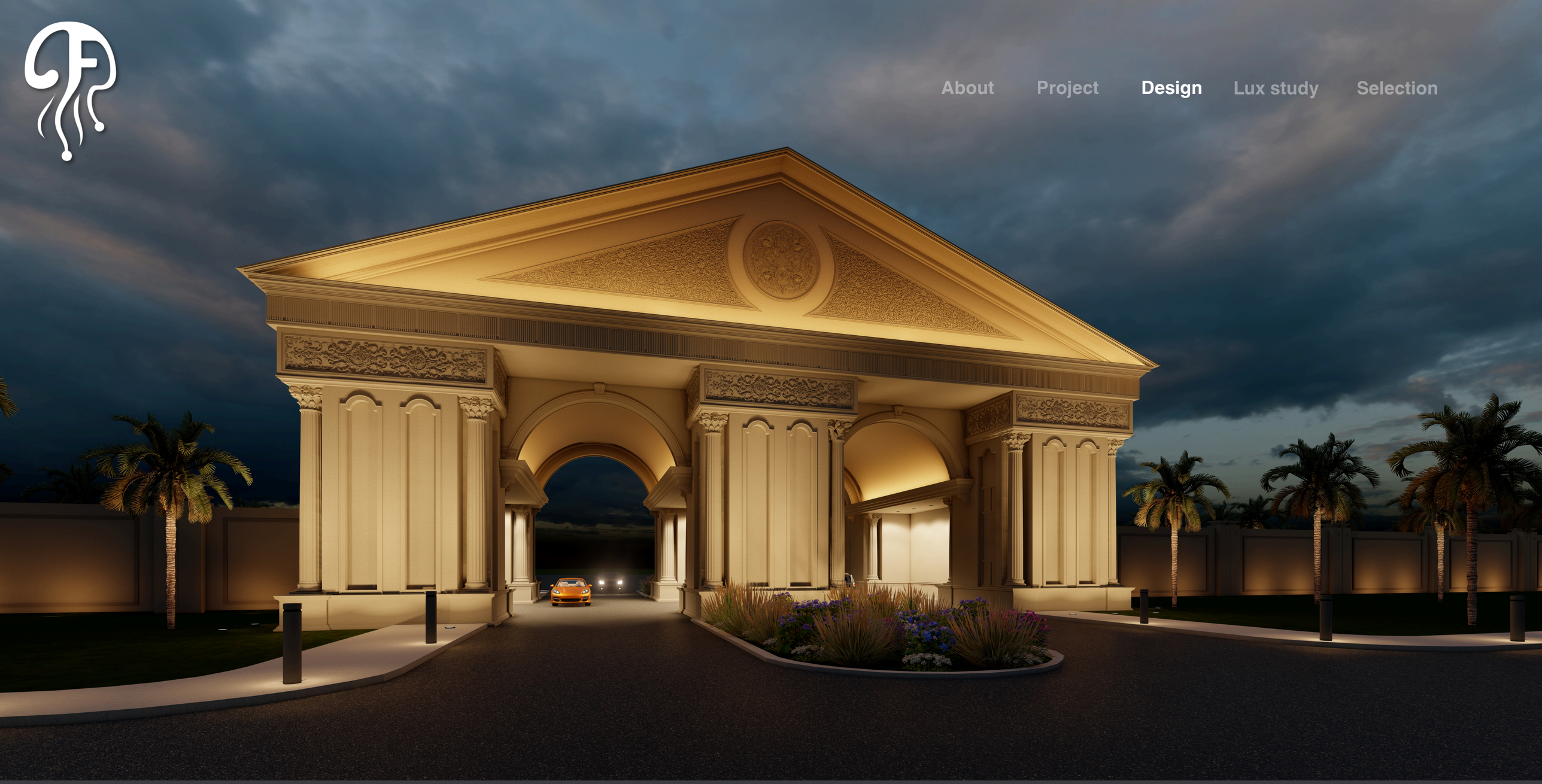

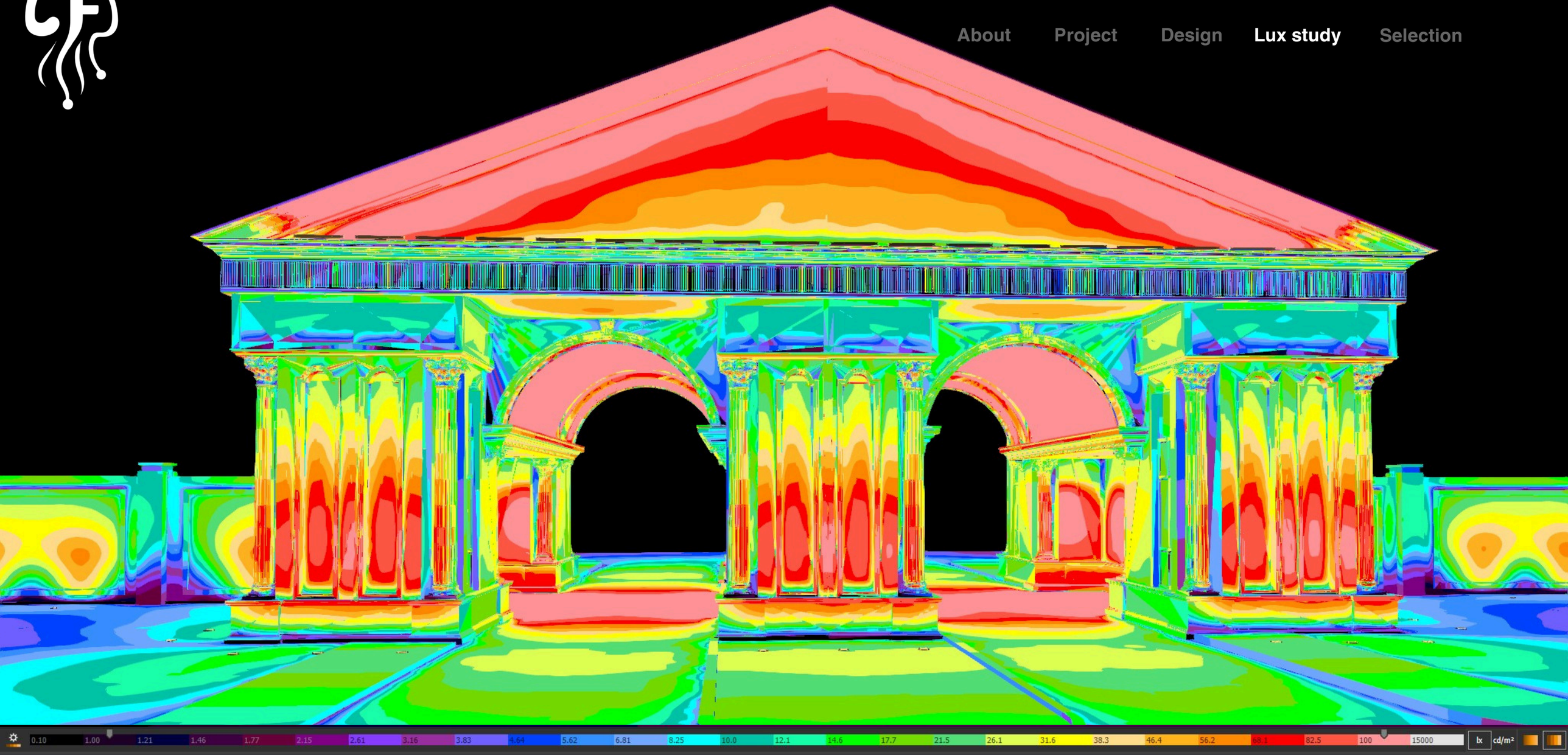
0.10 1.00 1.21 1.46 1.77 2.15 2.61 3.16 3.83 4.64 5.62 6.81 8.25 10.0 12.1 14.6 17.7 21.5 26.1 31.6 38.3 46.4 56.2 68.1 82.5 100 15000
lx
cd/m²

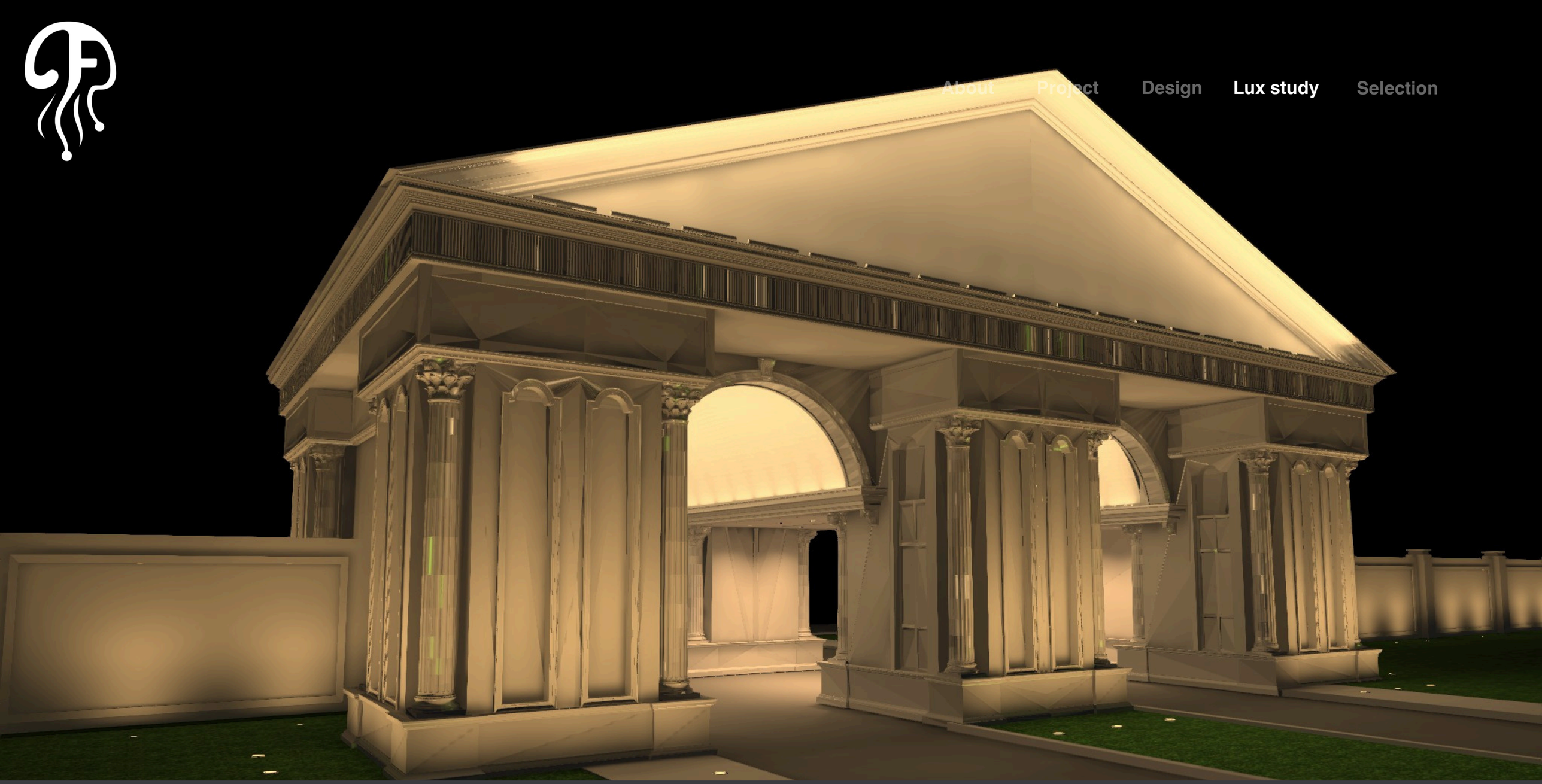

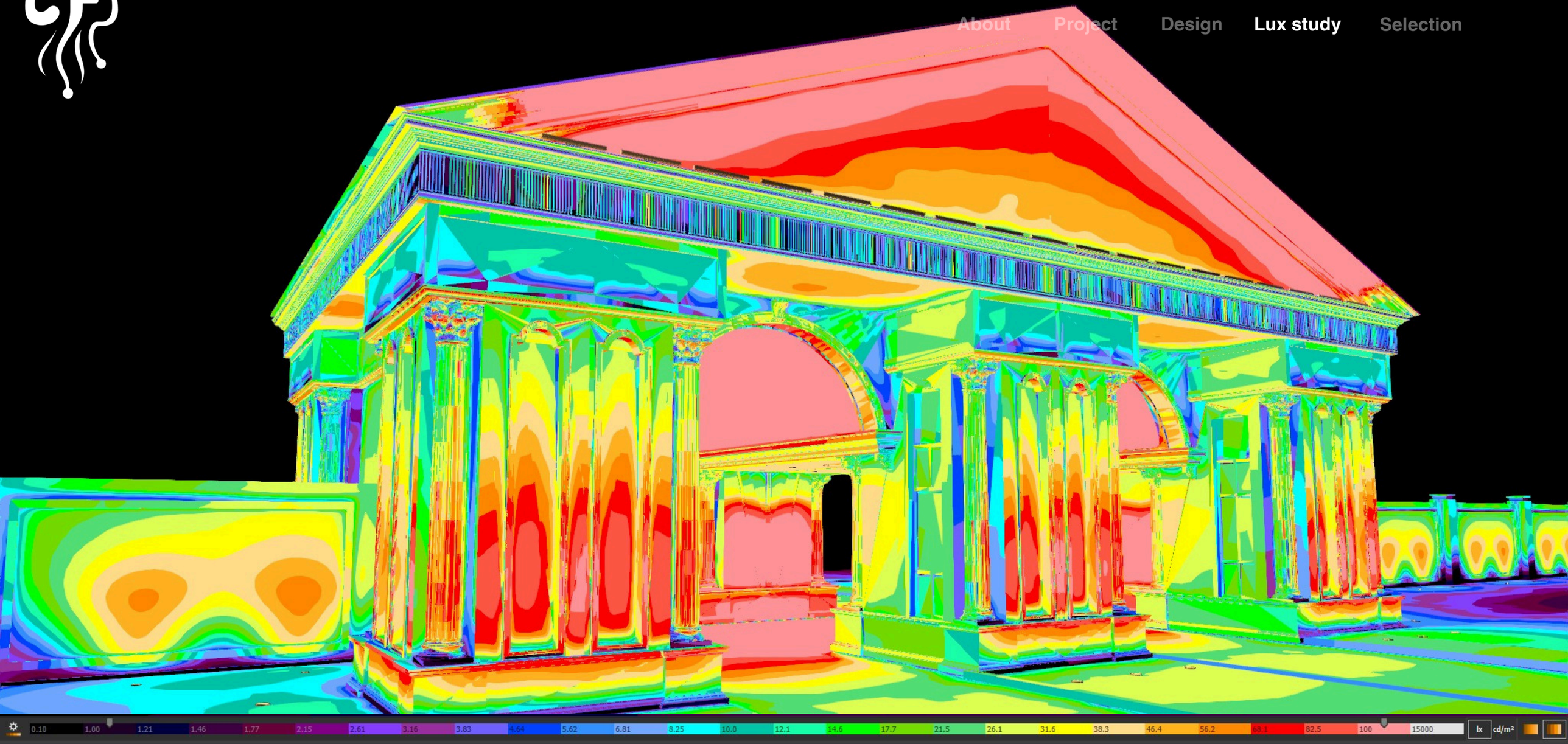
0.10 1.00 1.21 1.46 1.77 2.15 2.61 3.16 3.83 4.64 5.62 6.81 8.25 10.0 12.1 14.6 17.7 21.5 26.1 31.6 38.3 46.4 56.2 68.1 82.5 100 15000
lx
cd/m²

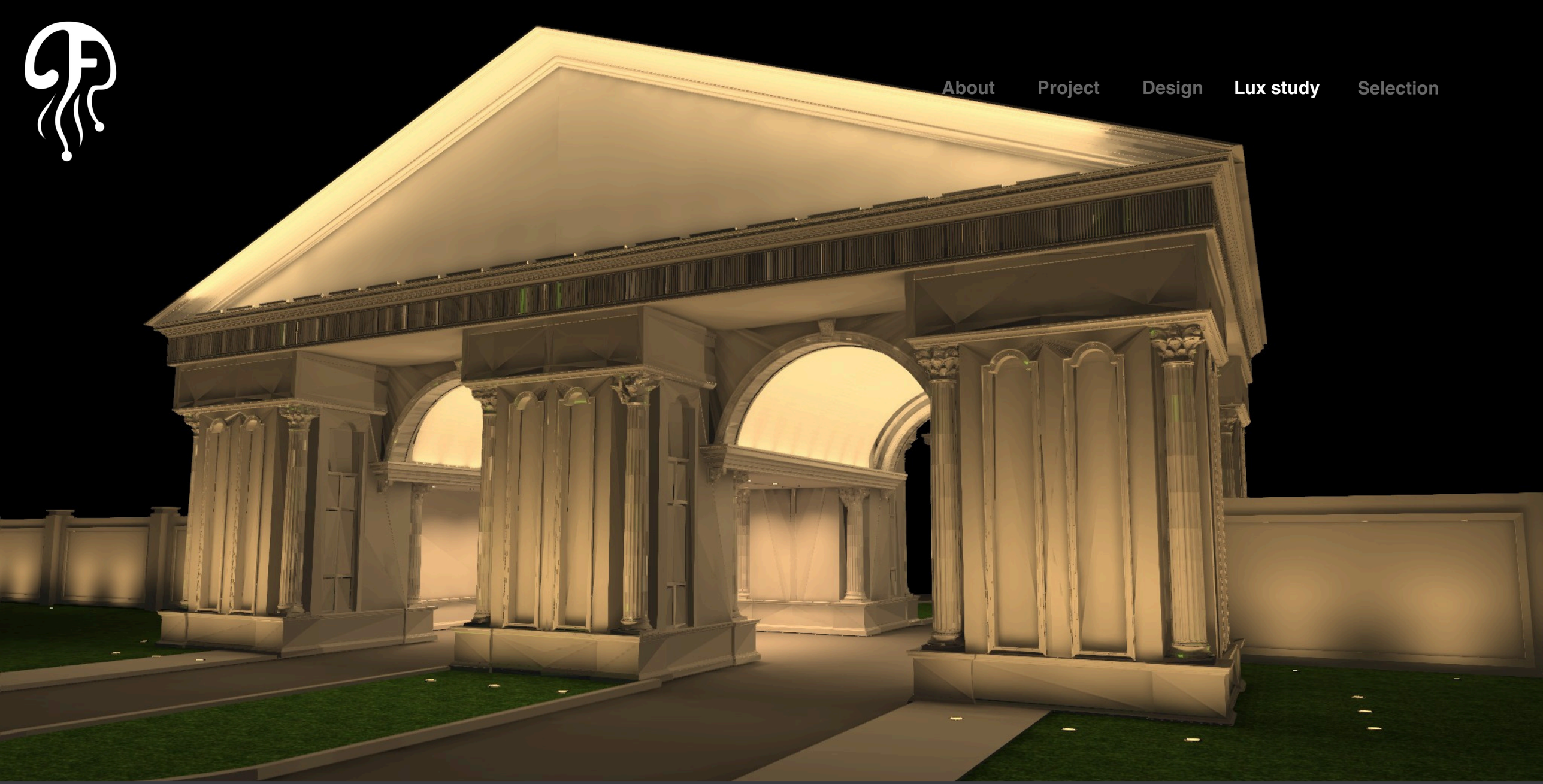

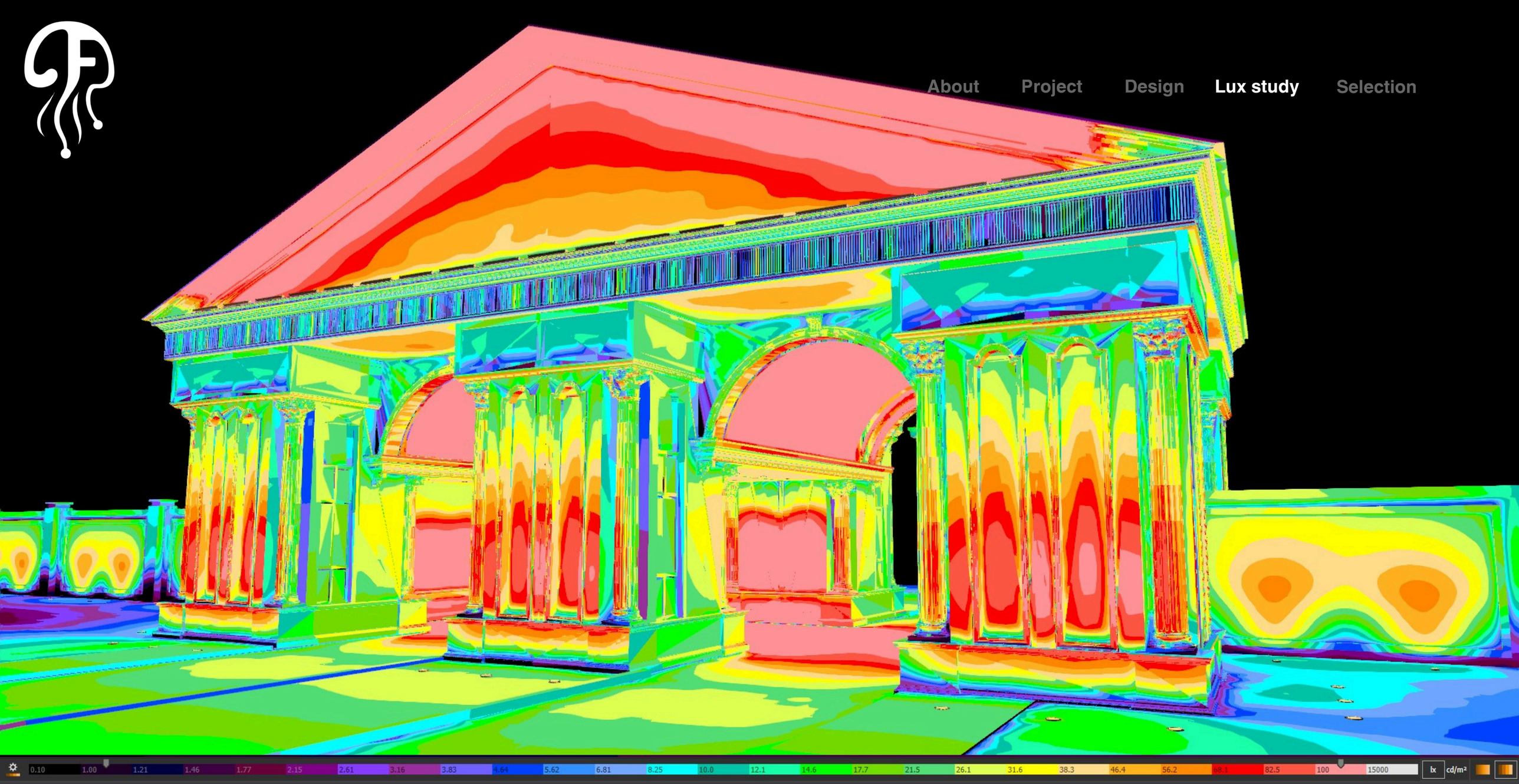
0.10 1.00 1.21 1.46 1.77 2.15 2.61 3.16 3.83 4.64 5.62 6.81 8.25 10.0 12.1 14.6 17.7 21.5 26.1 31.6 38.3 46.4 56.2 68.1 82.5 100 15000
lx
cd/m²

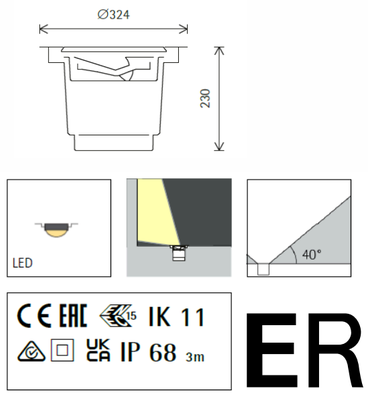

Technical data

Luminous flux of the luminaire	1859lm
Connected load	36.0W
Luminaire efficacy	52lm/W
Colour deviation	1.5 SDCM
Colour rendition index	CRI 92
Lumen maintenance (LED manufacturer specifications)	L90/B10 >50000h L90 >100000h
LED failure rate	0.1% >50000h
Dimming range	10%-100%
Dimming method	CCR_PWM
TLA (Temporal Light Artefacts)	SVM ≤ 0.4; PstLM ≤ 1
LMF	E
Standby power per control gear	--
Luminaires per circuit breaker B16	88
Temperature on the light aperture	38°C

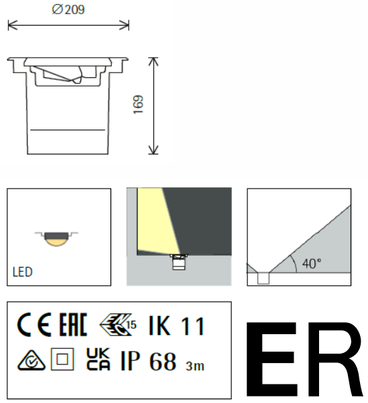

ERCO

Technical data

Luminous flux of the luminaire	1022lm
Connected load	19.0W
Luminaire efficacy	54lm/W
Colour deviation	1.5 SDCM
Colour rendition index	CRI 92
Lumen maintenance (LED manufacturer specifications)	L90/B10 >50000h L90 >100000h
LED failure rate	0.1% >50000h
Dimming range	--
Dimming method	--
TLA (Temporal Light Artefacts)	SVM ≤ 0.4; PstLM ≤ 1
LMF	E
Standby power per control gear	--
Luminaires per circuit breaker B16	50
Temperature on the light aperture	38°C

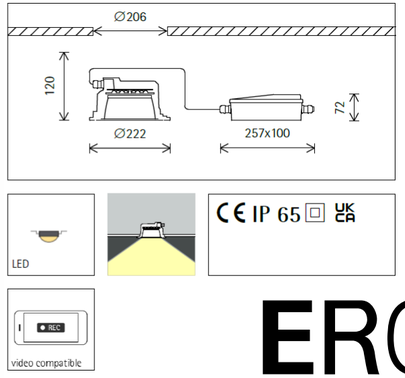

ERCO

Technical data

Luminous flux of the luminaire	3187lm
Connected load	34.3W
Luminaire efficacy	93lm/W
Colour deviation	1.5 SDCM
Colour rendition index	CRI 92
Lumen maintenance (LED manufacturer specifications)	L90/B10 >50000h L80/B50 >100000h
LED failure rate	0.1% >50000h
Dimming range	--
Dimming method	--
TLA (Temporal Light Artefacts)	SVM ≤ 0.1; PstLM ≤ 1
LMF	E
Standby power per control gear	--
Luminaires per circuit breaker B16	92

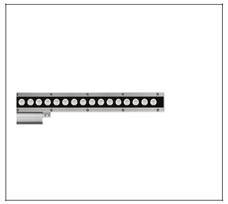
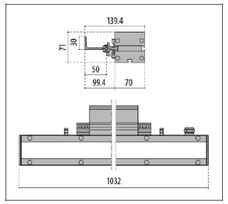

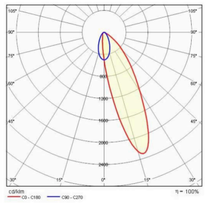

IP 66 IK 10 CLASS II ULR<1 CIEn°2>99 DALI CE EAC UK CA

PERFORMANCE iN LIGHTING | powered by GEWISS

Product data

ETIM Group:	EG000027	ETIM Class:	EC002892

General information

Lampholder:	LED	Light source:	LED
Lightsource lumen output [lm]:	4000	Luminaire lumen output [lm]:	2660
Luminaire wattage [W]:	26 W	Luminous efficacy [lm/W]:	102
CRI:	80	Colour temperature [K]:	3000
Colour / Finishing:	GR-11 / Anodised grey / Matt	IP degree of protection:	IP66
Impact resistance / impact energy:	IK10 20J xx9	Protection class:	II
Optic:	A18/M - Asymmetric Medium	Net weight [kg]:	5.857
Overall length [mm]:	1032	Overall width [mm]:	139
Overall height [mm]:	71		

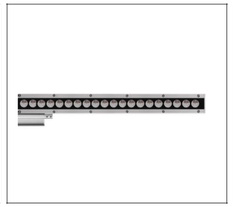

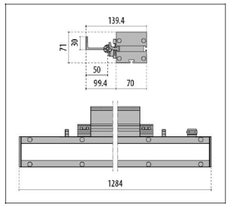

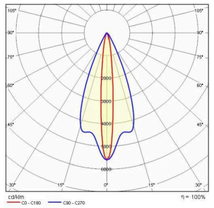

IP 66 IK 10 CLASS II ULR<1 CIEn'>99 DALI CE EAC UKCA

PERFORMANCE iN LIGHTING | powered by GEWISS

Product data

ETIM Group:	EG000027	ETIM Class:	EC002892

General information

Lampholder:	LED	Light source:	LED
Lightsource lumen output [lm]:	5000	Luminaire lumen output [lm]:	3348
Luminaire wattage [W]:	33 W	Luminous efficacy [lm/W]:	101
CRI:	80	Colour temperature [K]:	3000
Colour / Finishing:	GR-11 / Anodised grey / Matt	IP degree of protection:	IP66
Impact resistance / impact energy:	IK10 20J xx9	Protection class:	II
Optic:	ELL - Elliptical	Beam angle:	15°x45°
Net weight [kg]:	7.177	Overall length [mm]:	1284
Overall width [mm]:	139	Overall height [mm]:	71

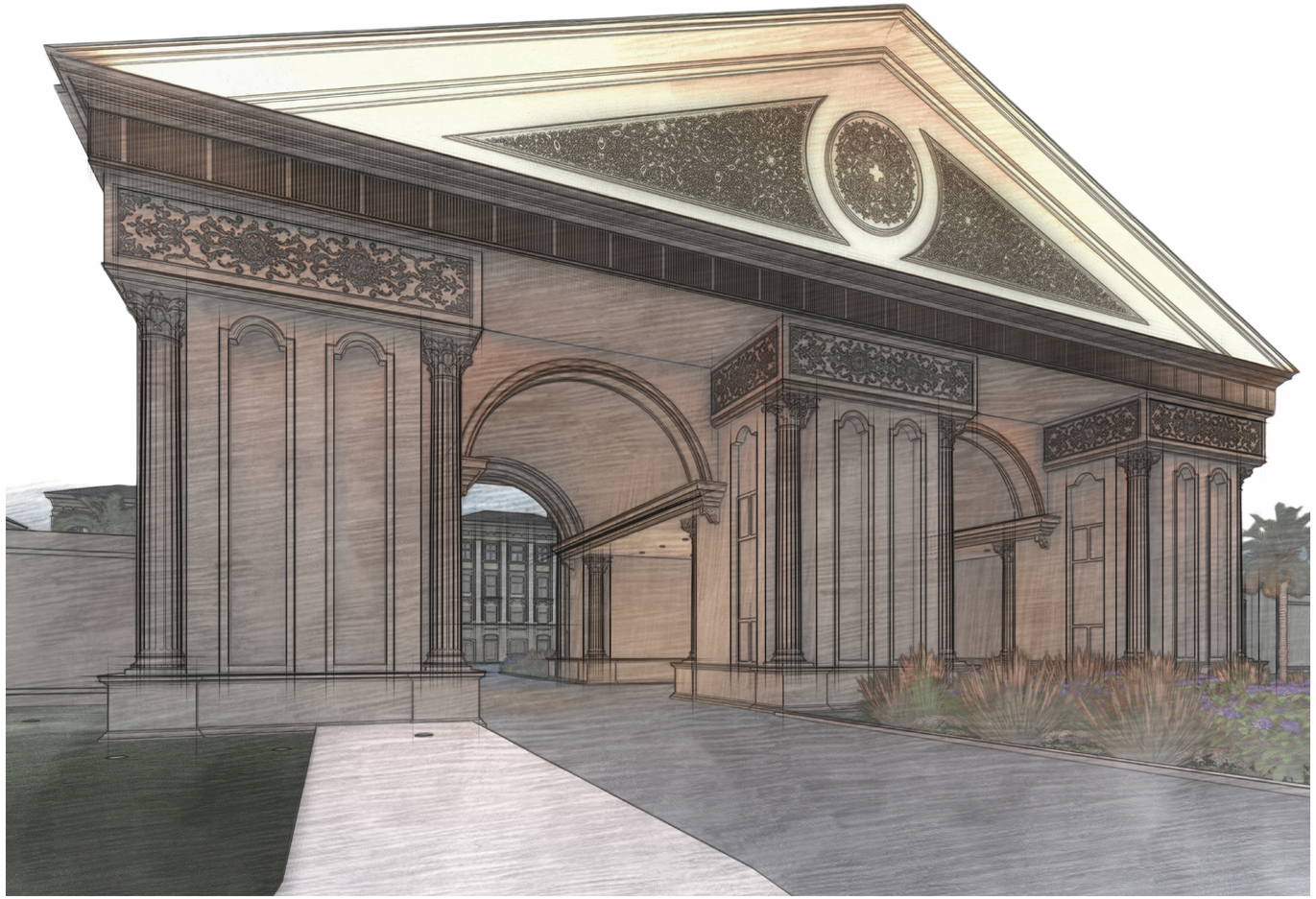

Thank You

+966 56831 3692

Home - Jellyfish Lighting